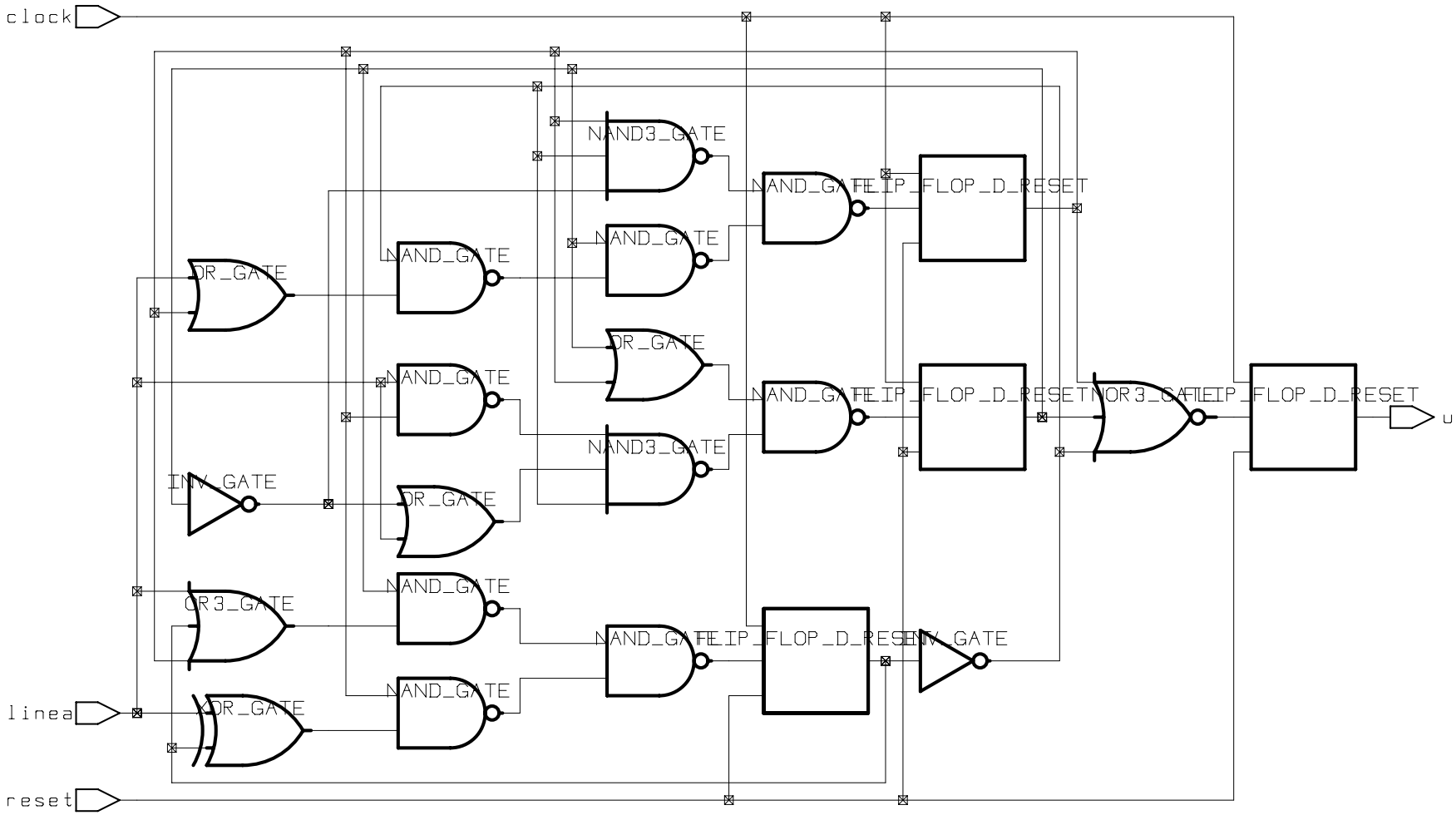

design: b02	designer: Eduardas Bareisa	date: 5/17/2002
technology: test_map_lib_n	company: KTU	sheet: 1 of 1